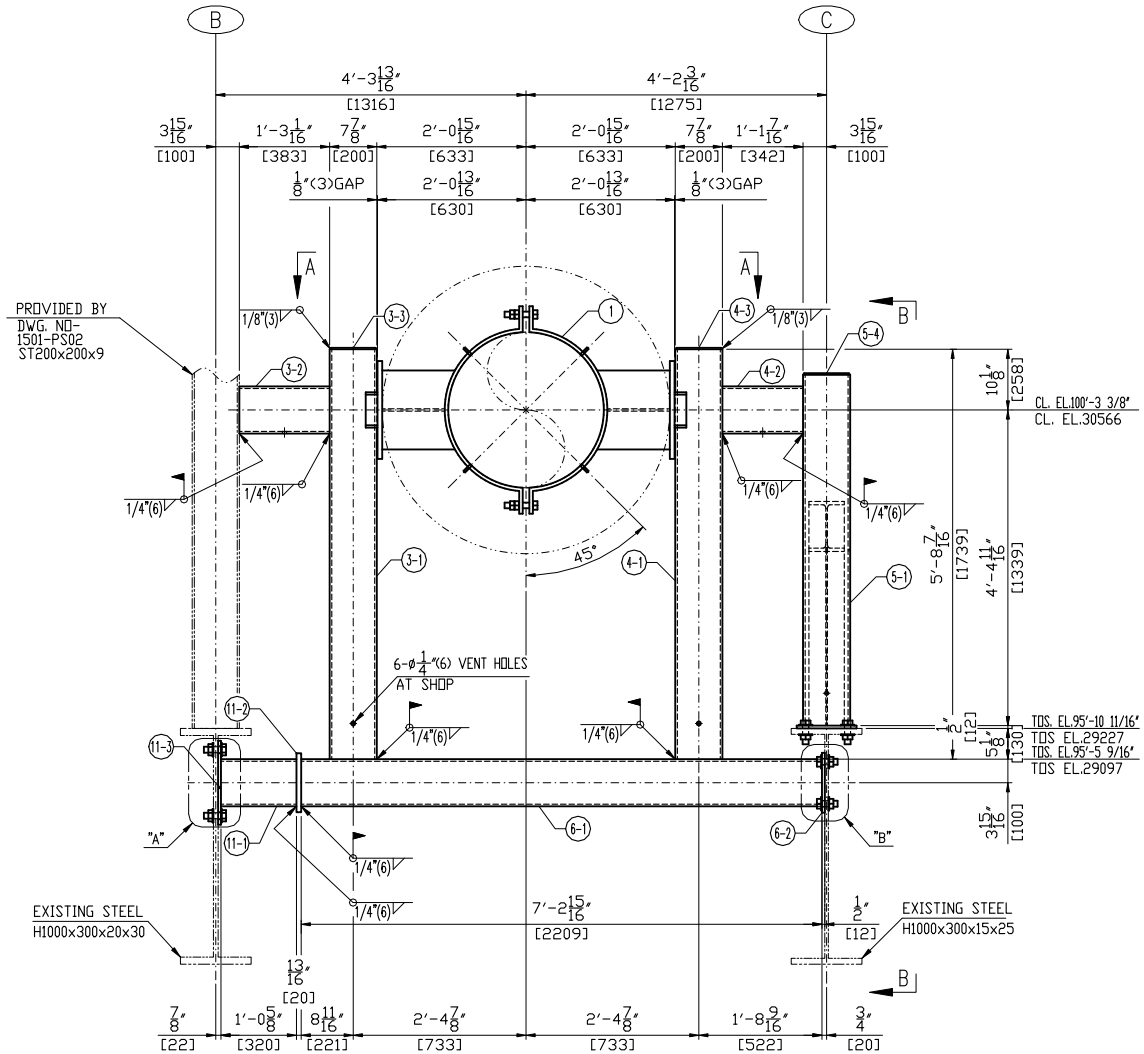

LOOKING NORTH

Revision History

Rev	Description	Date	Drawn / Checked By Approved By
–	INITIAL ISSUE	2026-01-21	Drawn J.B.HONG Checked By T.H.KIM Approved By B.L.CHOI

BILL OF MATERIAL — TOTAL WEIGHT : 1596.8 LB — SELECTION NO. 1502 — AREA LEFT

ITEM	DESCRIPTION	TYPE OR SIZE	LENGTH(mm)	LENGTH(IN)	QTY.	MATERIAL	WEIGHT(LB)/UNIT	WEIGHT(LB)/TOTAL	REMARK
1	PIPE CLAMP	PCSDA-650-630			1	A387-22		419.10	NOTE #2
2	CHANNEL	C150x75x6.5x10	50	1.97	4	A36	2.05	8.20	NOTE #3
3-1	SQUARE TUBE(1-I6)	ST200x200x9	1739	68.46	1	A500 Gr.B		200.51	NOTE #3
3-2	SQUARE TUBE(1-I6)	ST200x200x9	383	15.08	1	A500 Gr.B		44.16	NOTE #3
3-3	COVER PLATE(4-R14)	PL6x191x191			1	A36		3.79	NOTE #3
4-1	SQUARE TUBE(1-I6)	ST200x200x9	1739	68.46	1	A500 Gr.B		200.51	NOTE #3
4-2	SQUARE TUBE(1-I6)	ST200x200x9	342	13.46	1	A500 Gr.B		39.43	NOTE #3
4-3	COVER PLATE(4-R14)	PL6x191x191			1	A36		3.79	NOTE #3
5-1	SQUARE TUBE(1-I6)	ST200x200x9	1489	58.62	1	A500 Gr.B		171.68	NOTE #3
5-2	H-BEAM	H150x150x7x10	1345	52.95	1	A36		93.40	NOTE #3
5-3	PLATE(4-I27-SLOT33-S)	PL12x254x406			2	A36	21.42	42.84	NOTE #3
5-4	COVER PLATE(4-R14)	PL6x191x191			1	A36		3.79	NOTE #3
6-1	SQUARE TUBE(1-I6)	ST200x200x9	2209	86.97	1	A500 Gr.B		254.70	NOTE #3
6-2	PLATE(4-I27-SLOT33)	PL12x254x406			1	A36		21.42	NOTE #3

PIPING INFORMATION — PIPE SIZE (IN): 26 — PIPE MATERIAL: A335-P91

ISO NO. : 1502 — OPER. TEMP (F) : 1087 — INSULATION (IN): 11

SUPPORT NUMBER	SUPPORT COORDINATES X	Y	Z	DESIGN LOADS (KIPS) X	Y	Z	DESIGN MOVEMENTS (IN) X	Y	Z
1502-PS02	39'-3 13/16'	0	100'-3 7/8'	±0.558	±2.565	0.166	-0.12	-0.06	0.64
	11984	0	30578						

"Z" UP, "Y" NORTH, "X" GAS FLOW EAST

NOTES:

1. PIPE SUPPORT SHOP ATTACHMENTS, GENERAL NOTES, WELD & PLATE DETAILS 1635572-D1S0-3800
2. THIS ITEM WILL BE SUPPLIED BY ENGINEERED PIPE SUPPORT SUPPLIER.
3. THIS ITEM WILL BE SUPPLIED BY STEEL SUPPORT FABRICATOR.
4. PIPE ATTACHMENTS THAT ARE SHOP WELDED ONTO THE PIPE ARE SUPPLIED BY THE PIPE FABRICATOR.
5. BILL OF MATERIAL SHOWN ARE FOR ONE (1) SUPPORT, THERE IS ONE (1) SUPPORT PER UNIT
6. REFER TO DRAWING 1635572-D2S0-3801~3804 FOR TYPICAL SHOP WELDED CONNECTION DETAILS NOT SPECIFIED ON THIS DRAWING.
7. FF* : 1 15/16(50)mm FIELD ADJUST
8. THIS ITEM WILL BE SUPPLIED BY CUSTOMER.

HANGER SETTING DATA(EACH)		TOTAL TRAVEL	- IN
SPRING LOAD	- KIPS	THERMAL MOVEMENT	- IN
HOT LOAD	- KIPS	SPRING RATE	- LB/IN
COLD LOAD	- KIPS	VARIABILITY	- %

UNIT NO. : 11

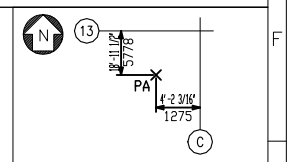

KEY PLAN

ISOMETRIC VIEW

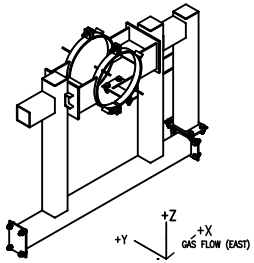

NLR
Copyright© GE Vernova and/or its affiliates 2026
All rights reserved. The information herein is proprietary information of GE Vernova and/or its affiliates. Thus, it is being provided with the explicit expectation of restricted use. All persons or legal entities receiving this information shall be deemed by the act of its receipt to have contractually agreed to make no duplications, reproductions of any nature by any means, modifications, disclosures, or use use any portion of this material; except as is expressly authorized in writing by GE Vernova and/or its affiliates.

THIRD ANGLE PROJECTION

Similar To: NONE	Created By: SEONGHWA		MLI No. NONE
First Made For: 1635572	Checked By: VIMAL.V	Approved By: Kim, Chunrae	IEC61355 No. MTC
GE VERNOVA	Document Type: DETAIL DRAWING		Sheet Size A2
	Document Title: PIPE SUPPORT FOR HRH STEAM OUTLET		
Creation Date 2026-01-21	Drawing No. 1635572-1502-PS02	Revision –	Sheet 1 OF 2

ITEM	DESCRIPTION	TYPE OR SIZE	LENGTH(mm)	LENGTH(IN)	QTY.	MATERIAL	WEIGHT(LB)/UNIT	WEIGHT(LB)/TOTAL	REMARK
7	H.S.B/N/2PW	1"-8 UNC-3"			4	A325	1.63	6.52	NOTE #3
8	H.S.B/N/2PW	1"-8 UNC-2 3/4"			4	A325	1.54	6.16	NOTE #3
9	H.S.B/N/2PW	1"-8 UNC-3 1/4"			8	A325	1.65	13.20	NOTE #3
10	LUG PLATE	PL10x40x100			8	A387-91	0.69	5.52	NOTE #4
11-1	SQUARE TUBE(1-I6)	ST200x200x9	320	12.60	1	A500 Gr.B		36.90	NOTE #3
11-2	PLATE	PL20x250x250			1	A36		21.63	NOTE #3
11-3	PLATE(4-I27-SLOT33)	PL12x254x356			1	A36		18.78	NOTE #3

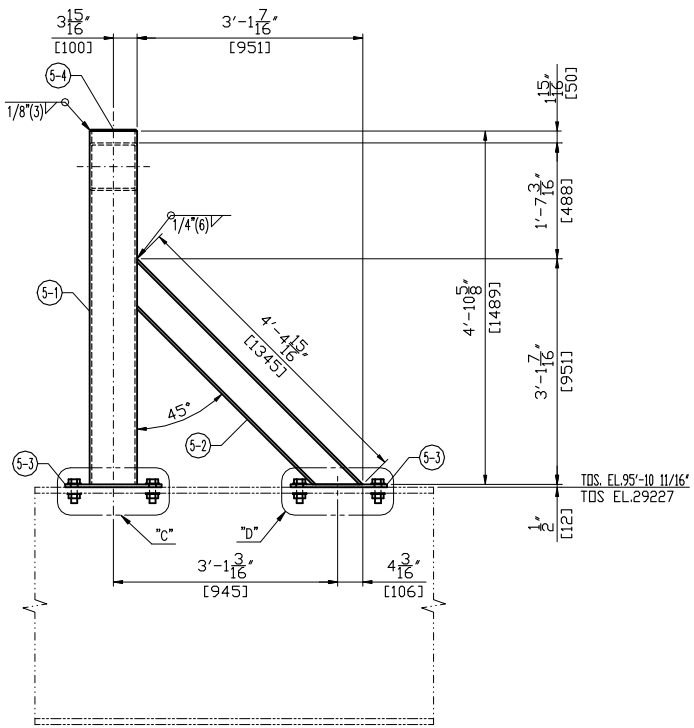

SECTION B-B
LOOKING WEST

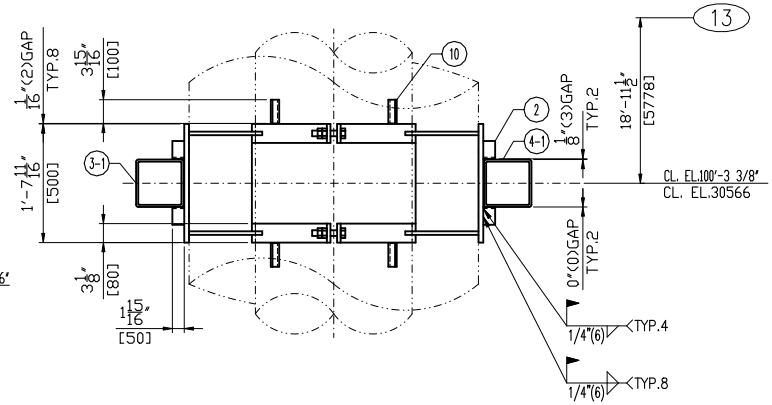

SECTION A-A
(PLAN VIEW N)

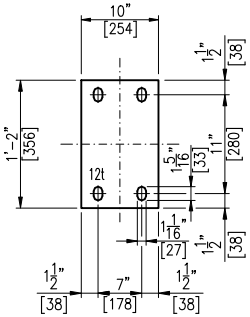

ITEM 11-3

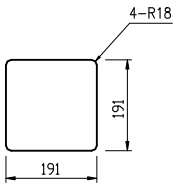

ITEM 3-3 4-3 5-4

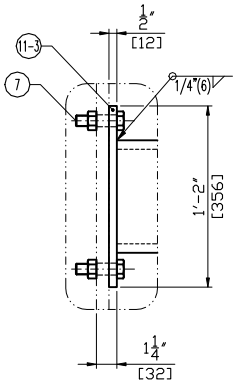

DETAIL "A"

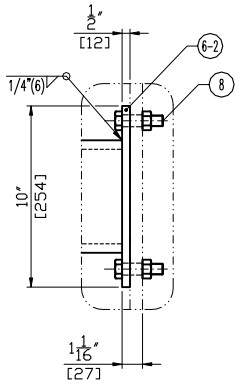

DETAIL "B"

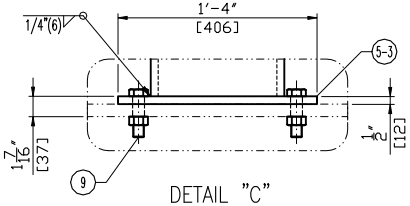

DETAIL "C"

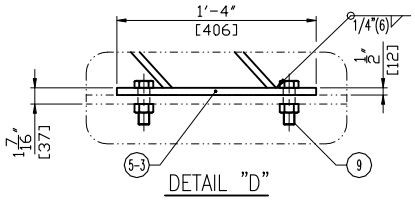

DETAIL "D"

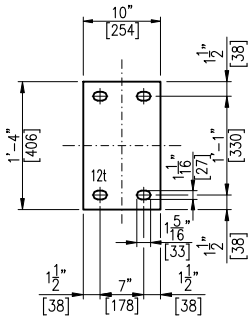

ITEM 5-3

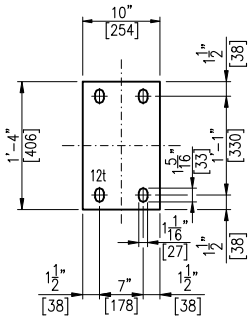

ITEM 6-2

GE VERNOVA	Document Type: DETAIL DRAWING		Sheet Size A2
	Document Title: PIPE SUPPORT FOR HRH STEAM OUTLET		
Creation Date 2026-01-21	Drawing No. 1635572-1502-PS02	Revision –	Sheet 2 OF 2

NLR

Copyright © GE Vernova and/or its affiliates 2026
All rights reserved. The information herein is proprietary information of GE Vernova and/or its affiliates.